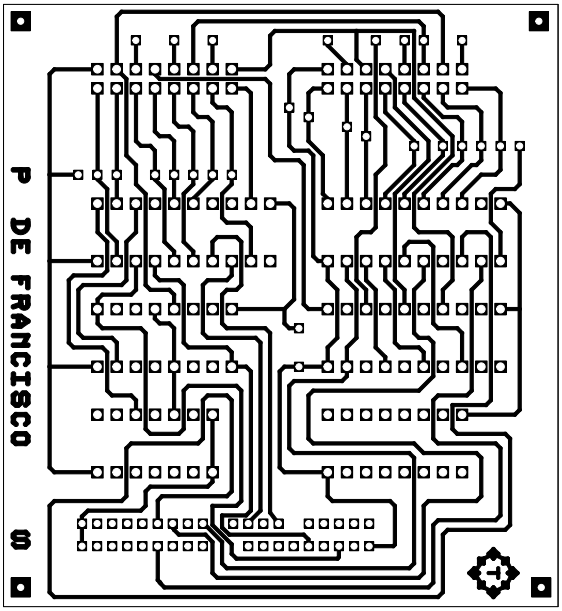

5/03/2012 22:35:11 mirrored /mnt/win_d/Mis documentos/Electronica/projects/pds/Placa_atari.brd